OUKA
Osaka University Knowledge Archive

Title	Elbow angle and stiffness control by twisted string actuators and nested feedback
Author(s)	Matic, Adam; Gomez-Marin, Alex
Citation	
Version Type	VoR
URL	https://doi.org/10.18910/84845
rights	
Note	

Osaka University Knowledge Archive : OUKA

https://ir.library.osaka-u.ac.jp/

Osaka University

Elbow angle and stiffness control by twisted string actuators and nested feedback

Adam Matić, Alex Gomez-Marin
Instituto de Neurociencias CSIC-UMH, Alicante, Spain
adam.matic@gmail.com

1 Introduction

We can voluntarily control at least two variables at the elbow joint – the angular position of the elbow, and the stiffness or tone of the muscles articulating it. The connectome of sensory-motor loops in the spinal cord is mostly known; a recent primer on stretch reflexes summarizes current knowledge: spinal pathways form nested feedback loops [1]. However, we don't fully understand the computational principles of neural control that would allow us to create equally able artificial systems.

Twisted string actuators (TSAs) are tendon driven actuators that convert the rotary motion of a motor shaft to linear motion of the load by twisting a string. TSAs are an emerging technology with promising uses in exoskeletons and robotic hands [2][3][4]. They are light, efficient and flexible, but the transmission of force via string twisting is highly nonlinear. To compensate for nonlinearities and ensure good performance and high bandwidth, model-based control architectures are commonly proposed (e.g. [5][6]).

Here, we use two TSAs to create a mechanical model of the elbow joint, and we design a control architecture inspired by known anatomical connections in spinal sensorimotor loops, and by a simulation of a hierarchy of feedback loops [7]. As a proof of concept, we demonstrate low bandwidth, but high precision angular position control.

2 Methods

2.1 Hardware

We placed two TSAs in parallel, with one end fixed to a board and the other end connected to the elbow joint (Fig. 1), so that two TSAs acted as antagonists; with ~1.5cm of distance from joint center. Each TSA was composed of a small geared DC motors (N20), a string (~1mm diam.), a stationary sliding potentiometer for measuring string contraction (10KOhm linear, 6cm travel) and another moving potentiometer placed in series with the string (10KOhm, linear, 1cm travel), measuring the stretch of a rubber band (Fig 1, zoom-in). By Hooke's law, the output of the second potentiometer is approximately proportional to the tension of the rubber band and therefore the tension of the tendon. The angle of the joint is measured by a magnetic angular position sensor (ams as5047, 14bit resolution). Sensors are read out by an Arduino Pro Mini (5V, 16Mhz), at 30ms sampling time. The microcontroller sent the output PWM signals to a motor driver (TB6612FNG) with maximum output of 12V.

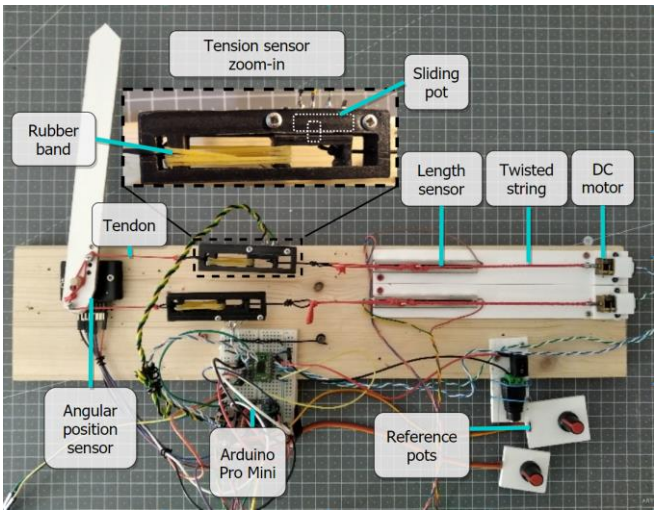

Figure 1: Hardware setup

2.2 Control architecture

The diagram (Fig. 2) shows the nested or hierarchical control architecture of the system. The outer-most loop controls angular position of the joint measured in degrees. The controller is proportional-derivative (PD) with a low pass filter. In the time domain, the equation is:

$$\dot{o} = [K_p(\theta_{ref} - \theta) - K_v\dot{\theta} - o]/tc, \qquad (1)$$

where o is controller output, Kp and Kv the position and velocity gains, θ the measured joint angle, θ_{ref} the reference for joint angle and tc the time constant of the first order low pass filter. Both gains are large (Kp=-20K, Kv=5K) and the time constant is 15s, ensuring high gain at low frequencies and reducing the bandwidth to avoid instabilities at high frequencies. The output o of the controller is a reference signal for the inner control loop (low gain, Kd=1) that senses and controls *tension difference*. The algebraic difference between measured tendon tensions of the two TSAs is proportional (approximately) to the torque acting on the joint. In other words, an angle error will create a torque reference, and this will cause one of the TSAs to increase the tension of the tendon, pull more strongly, and correct the angle error. Similarly, the stiffness of the joint is approximated as the *sum of measured tendon tensions*, and controlled in a low-gain loop (Ks = 3). The outputs of the sum comparator and the difference comparator are combined to form reference signals for the inner loops. The string length control loops are the inner-most loops in the hierarchy, with a loop gain of one.

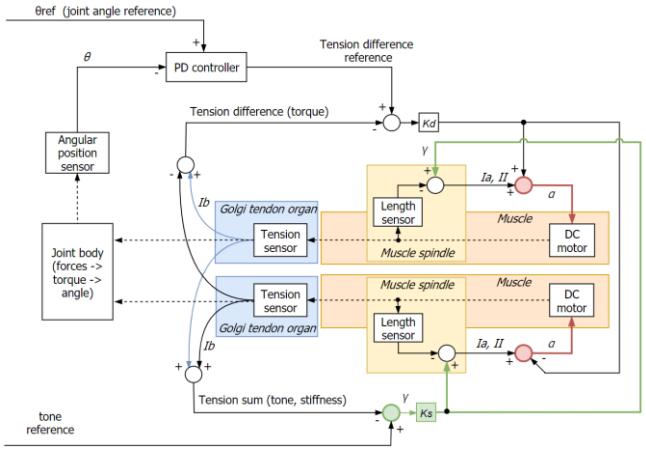

Figure 2. Block diagram of the control hierarchy with hypothetical biological analogs (in cursive)

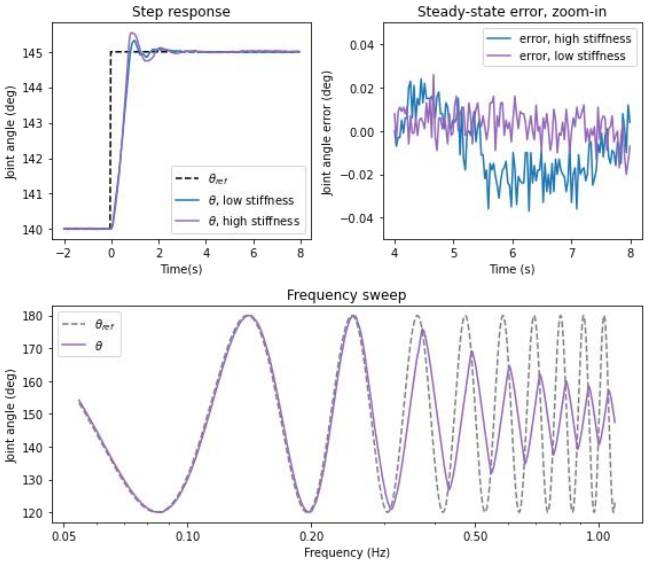

Figure 3. Step response, steady-state error and frequency sweep for measured joint angle

2.3 Biological analogs

The two TSAs are analogs of opposing muscles in the joint (Fig 2). Both mechanisms can only produce a pulling force and need an opposing force to elongate and control muscle length measured by the length sensor. If the sum of tensions is too low (low muscle tone and joint stiffness), joint angle control does not work – this seems to parallel the biological phenomenon of alpha-gamma co-contraction. The muscle spindle is modelled by the combined length sensor and the comparator receiving input from gamma motor neurons (green circle and line). The Ia and II fibers carrying the length error signal are entering the alpha motor neuron (red circle and line) that sends its axon to the extrafusal muscle fibers. The tensions sensors are analogs of Golgi tendon organs, and their outputs type Ib fibers connect to contralateral interneurons to form the tension sum and difference signals. The magnetic angle sensor is an analog of high-resolution visual angle sensing in humans, although with a shorter delay. The loop sampling time of 30ms is analogous to spinal reflex signal transport delay.

3 Results

In the initial test, we analyzed the movement range, speed, and precision using the step response and frequency seep in situations of low and high stiffness (Fig. 3); keeping stiffness constant during the task.

The total movement range was limited to 60 degrees (from 120° to 180°). Maximum movement speed was approximately 12 deg/s. The high stiffness step response had a higher overshoot than the low stiffness response, both settling down at about 3 seconds after the reference step. The bandwidth was low, with attenuation of position signal at frequencies above ~0.2Hz.

However, the precision was relatively high, approaching the limits of the angular position sensor, with the steady state error of only +/-0.03 degrees in low stiffness and +/-0.04 degrees in high stiffness situation.

4 Conclusion

The hierarchical control architecture working with noisy tension and length sensors, relatively long loop delays and affordable low-precision components is capable of high-precision control of joint angle, with up to +/-0.03° error. The source of this precision is the removal of backlash in the joint by using opposing TSAs with a constant sum of tensions, coupled with the high-gain angular position control loop (eq. 1). While the high precision might be satisfactory, the speed and bandwidth of the system are low. In future work we will attempt to improve them by using faster motors and a lower gear ratio. From the biological modelling side, a single joint with opposing muscles is the simplest arrangement, and more research is needed to verify that the control scheme can handle e.g. multiple partial agonists and antagonists. Also, we plan to incorporate biologically plausible transmission delays into different hierarchical levels of control and compare the behavior of the robot to human behavior.

References

[1] Reschechtko S, Pruszynski JA. Stretch reflexes. Current Biology. 2020 Sep 21;30(18):R1025-30.
[2] Palli G, Natale C, May C, Melchiorri C, Wurtz T. Modeling and control of the twisted string actuation system. IEEE/ASME Transactions on Mechatronics. 2012 Jan 25;18(2):664-73.
[3] Popov D, Gaponov I, Ryu JH. Bidirectional elbow exoskeleton based on twisted-string actuators. In2013 IEEE/RSJ International Conference on Intelligent Robots and Systems 2013 Nov 3 (pp. 5853-5858). IEEE.
[4] Shin YJ, Lee HJ, Kim KS, Kim S. A robot finger design using a dual-mode twisting mechanism to achieve high-speed motion and large grasping force. IEEE Transactions on Robotics. 2012 Jul 24;28(6):1398-405.
[5] Rodriguez AS, Hosseini M, Paik J. A hybrid control strategy for force and precise end effector positioning of a twisted string actuator. IEEE/ASME Transactions on Mechatronics. 2020 Dec 24.
[6] Nedelchev S, Gaponov I, Ryu JH. Accurate dynamic modeling of twisted string actuators accounting for string compliance and friction. IEEE Robotics and Automation Letters. 2020 Jan 30;5(2):3438-43
[7] Powers WT. The nature of robots. Part 3: A closer look at human behavior. Byte. 1979 Aug;4(8):94-116